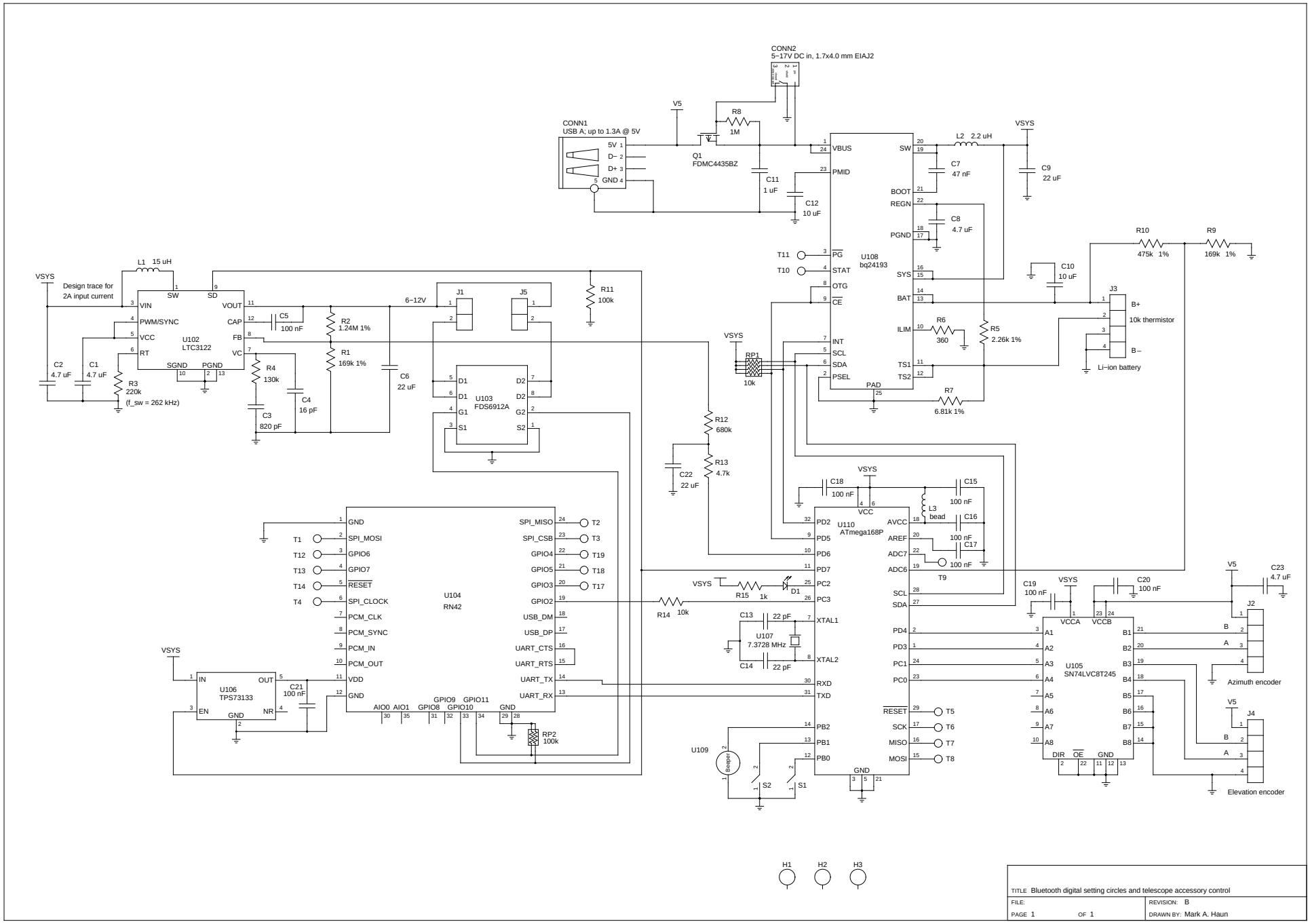

TITLE Bluetooth digital setting circles and telescope accessory control

FILE:

REVISION: B

PAGE 1 OF 1

DRAWN BY: Mark A. Haun